VersaLED Lighting
Versatile Lighting Solutions

Project	
Type	
Catalog Number	

SPECIFICATIONS OUTDOOR

FL15-CB
LED Flood Light

HOUSING
- Heavy duty die cast aluminum housing with hinged front frame
- Bronze powdercoat bronze finish
- Corrosion resistant housing and hardware
- OxyShield 9-stage anti-oxidation process
- Silicone rubber gasket

ELECTRICAL
- Quad Tap (QT) - 120/208/240/277V
- Dimmable driver standard

OPTICAL SYSTEM
- Glass lens
- High quality heat sinks for temperature control
- IC current controlled LED circuits
- CRI>70
- Available in 5000K

MOUNTING
- Provided standard with yoke mount

CODE COMPLIANCE
- UL Listed for Wet Locations
- IP65 Rated
- Meets DLC Requirements

WARRANTY
- 5 Year
- 10 Year Available

ORDERING INFORMATION

CATALOG #	Lumens	Distribution	Color
FL15-CB-77L-QT-50K-AY	8,795	Nema 7	5000K
FL15-CB-115L-QT-50K-AY	12,548	Nema 7	5000K
FL15-CB-147L-QT-50K-AY	14,850	Nema 7	5000K
FL15-CB-172L-QT-50K-AY	17,180	Nema 7	5000K
FL15-CB-235L-QT-50K-AY	19,366	Nema 7	5000K

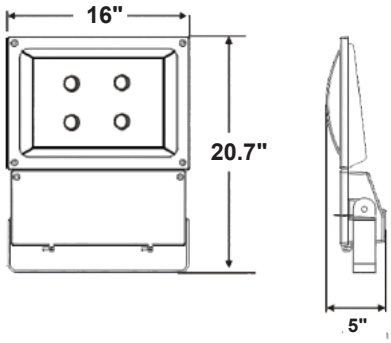

OPTIONS (Factory Installed)		
PC1	-	120V Photocell
PC2	-	208-277V Photocell
30K	-	3000K (extended lead time)
40K	-	4000K (extended lead time)
10YR	-	10 Year Warranty
CC	-	Custom Color

ACCESSORIES (Ships on Side)		
FL15-CB-SF	-	Slipfitter
FL15-CB-SB	-	Trunion
FL15-CB-MA6	-	6” Mounting Arm
FL15-CB-MA10	-	10” Mounting Arm