VersaLED Lighting
Versatile Lighting Solutions

Project	
Type	
Catalog Number	

SPECIFICATIONS OUTDOOR

FL2-Q
Small LED Flood Light

HOUSING
- Heavy duty die cast aluminum housing and hinged gasketed frame
- Bronze powdercoat bronze finish
- Corrosion resistant housing and hardware
- OxyShield 9-stage anti-oxidation process
- Silicone rubber gasket

ELECTRICAL
- Quad Tap (QT) - 120/208/240/277V
- Dimmable driver standard
- 347V-480V also available
- Operating Temperature: -40°C (-40°C) - 50°C (122°F)

OPTICAL SYSTEM
- Clear glass lens
- High quality heat sinks for temperature control
- IC current controlled LED circuits
- 347,000 Hours @ L_{70}
- CRI: 80
- Available in 5000K
- Type V: 110°H x 110°V NEMA 7H x 7V

ILLUMINATION
- 21.7W LED
- 25 System Watts
- ~100W HID

MOUNTING
- Adjustable knuckle with angle indicators and 1/2" NPS threads standard
- Ground stake and post top fitter available

CODE COMPLIANCE
- cSAus Listed for Wet Locations
- Meets UL Requirements
- IP65 Rated
- Made in USA Available
- Meets DLC Requirements

WARRANTY
- 5 Year
- 10 Year Available

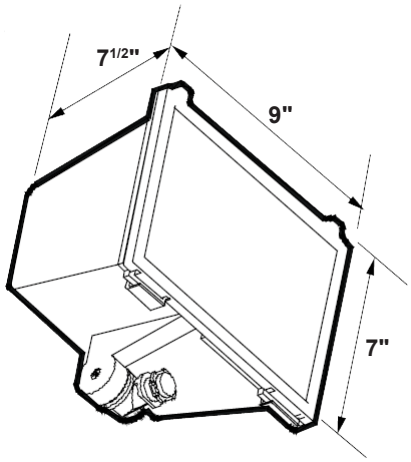

ORDERING INFORMATION

CATALOG #	Lumens	Distribution	Color
FL2-Q-22L-QT-50K	2,123	Type V	5000K

OPTIONS (Factory Installed)		
SGP	-	Surge Protection
SGF	-	Single Fuse
DBF	-	Double Fuse
480V	-	347-480V Driver
10YR	-	10 Year Warranty
CC	-	Custom Color

ACCESSORIES (Ships on Side)		
FL2-Q-GS	-	Glare Shield
FL2-Q-LG	-	Vandal Guard
FL2-Q-WG	-	Wire Guard
FL2-Q-STK	-	Ground Stake
FL2-Q-PTF	-	Post Top Fitter
		For 2 3/8" - 3 1/2" Poles

VersaLED Lighting
Versatile Lighting Solutions

PHOTOMETRICS

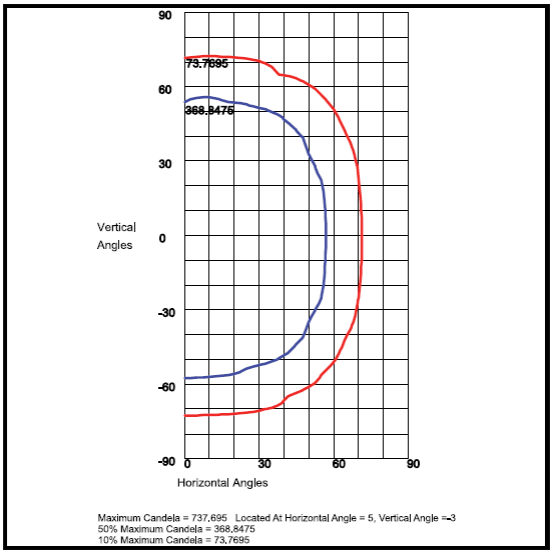

FL2-Q-22L-QT-50K