VersaLED Lighting
Versatile Lighting Solutions

Project

Type

Catalog Number

SPECIFICATIONS OUTDOOR

HOUSING
- Die-cast aluminum housing
- Bronze powdercoat finish
- Photocell included - can be turned on or off with switch

ELECTRICAL
- Quad Tap (QT) - 120-277V
- 0-10V Dimmable driver standard
- Operating Temperature: -40°C (-40°F) - 50°C (122°F)
- 159,000 hours @ L_{70}
- 6kV Surge Protection
- Power factor > 0.9
- THD <20%

OPTICAL SYSTEM
- Polycarbonate lens
- Integral photocell standard
- MCT (Selectable between 3000K/4000K/5000K)
- High quality heat sinks for temperature control
- Two modules independently rotate -15° to 210°
- CRI>80

MOUNTING
- Wall mounting kit

CODE COMPLIANCE
- cULus Listed for Wet Locations
- IP65 Rated
- DLC Premium Listed
- FCC Part 15, class A

WARRANTY
- 5 Year



VLWP58.5-B-MCT

LED Rotatable Wattage and Color Selectable Wall Pack

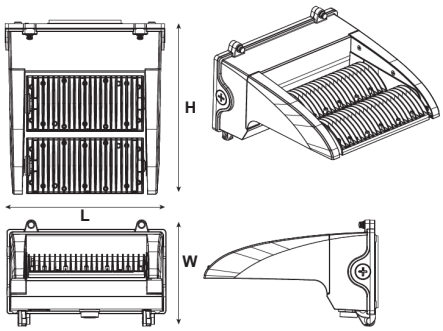

Model Number	L	W	H	Weight
VLWP58.5-B-1L	9.37	6.27	10.15	5.3 lbs

ORDERING INFORMATION

CATALOG #	Wattage	Lumens	CCT
VLWP58.5-B-1L-QT-MCT	60W - 119W	9800 - 18,700 Lm	30K/40K/50K

Accessories (order separately, ships on side)

HD07VR-PHF-1	-	PIR sensor - max mounting height 39’
HD07VR-MHF-1	-	Microwave step-dimming sensor - 49’
HD05R	-	Remote control for HD07VR sensors

LUMEN INFORMATION

Catalog #	Low Lumens			Mid Lumens			Mid Lumens			High Lumens		
	3000K	4000K	5000K	3000K	4000K	5000K	3000K	4000K	5000K	3000K	4000K	5000K
VLWP58.5-B-1L	17,466 Lm	18,713 Lm	18,210 Lm	15,102 Lm	16,060 Lm	15,796 Lm	12,491 Lm	13,102 Lm	13,080 Lm	9888 Lm	10,271 Lm	10,354 Lm
	119W	115W	118W	99W	97W	99W	79W	77W	79W	61W	60W	61W

ELECTRICAL INFORMATION

Catalog #	Input Amps (A)											
	Low Lumens			Mid Lumens			Mid Lumens			High Lumens		
	120V	240V	277V	120V	240V	277V	120V	240V	277V	120V	240V	277V
VLWP58.5-B-1L (30K)	0.99	0.49	0.43	0.83	0.41	0.36	0.66	0.33	0.29	0.51	0.25	0.22
VLWP58.5-B-1L (40K)	0.96	0.48	0.41	0.80	0.40	0.35	0.64	0.32	0.28	0.50	0.25	0.22
VLWP58.5-B-1L (50K)	0.99	0.49	0.43	0.83	0.41	0.36	0.66	0.33	0.29	0.51	0.25	0.22

DIMMER COMPATABILITY

Manufacturer	Model Number	Dimming Range	Load Switching Capacity
Best Lighting	DWS-010V-T	10%-100%	600W
Best Lighting	DWS-010V-D	10%-100%	600W
Leviton	IP710-LFZ	10%-100%	1200W
Lutron	DVSTV	10%-100%	450W

PHOTOMETRICS

VLWP58.5-B-1L

Luminaire Data

Description	Rotatable Wall Pack Lumen and Kelvin Select
Total Lumens	18,713
Input Wattage	115
Efficacy (lm/W)	163
Max. Cd.	7638.6 (112.5H, 25V)
IES Classification	N.A.
Longitudinal Classification	N.A.

Zonal Lumen Summary

Zone	Lumens	%Fixt
0-30°	5,118	27.4%
0-60°	15,143	80.9%
0-80°	18,485	98.8%
80-90°	205	1.1%*
0-90°	18,690	99.9%
90-110°	4	0.0%
110-180°	0	0.0%
0-180°	18,713	100.0%

Luminaire Classification Systems (LCS)

LCS Zone		Lumens	%Lum
FL	0-30	2,564	13.7%
FM	30-60	5,027	26.9%
FH	60-80	1,678	9.0%
FVH	80-90	103	0.6%
BL	0-30	2,554	13.6%
BM	30-60	4,998	26.7%
BH	60-80	1,663	8.9%
BVH	80-90	102	0.5%
UL	90-100	2	0.0%
UH	100-180	21	0.1%
Total		18,713	100.0%
BUG Rating		B4-U2-G3	

Photometric calculated at 4000k, highest lumen output, and heads set to 0°.

* 80-90° glare zone is calculated by dividing the lumens in that zone by the lumen total in the 0-90° zone

