VersaLED Lighting
Versatile Lighting Solutions

Project

Type

Catalog Number

SPECIFICATIONS — OUTDOOR

HOUSING
- Die cast aluminum housing
- Powder coat finish
- Available in bronze, white, black, and gray housing

ELECTRICAL
- Quad Tap (QT) - 120-277V
- 0-10V Dimmable driver standard
- Power factor >.95
- Operating Temperature: -20°C (-4°F) - 40°C (40°F)
- 70,000 hours @ L_{70}

OPTICAL SYSTEM
- Anti-UV, Fire resistant shatterproof polycarbonate lens
- Integrated uplight, can be controlled by switch
- Up:10%, Down: 90%
- MCT: Selectable between 3000K/4000K/5000K
- Type III standard
- CRI≥80

CODE COMPLIANCE
- cETLus Listed for Wet Locations
- Dark Sky compliant
- IP65
- DLC Listed

WARRANTY
- 5 Year



WP29-W
LED Wallpack

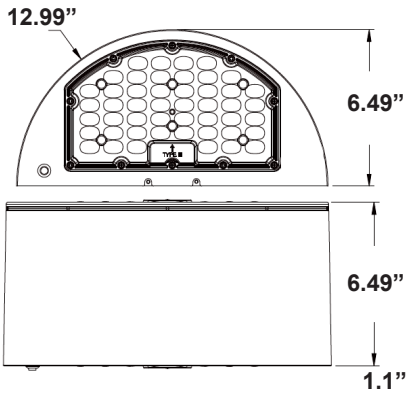

ORDERING INFORMATION

MODEL #	Wattage	Driver	CCT	Housing
WP29-W	**1L** (24W/32W/40W, 3480/ 4640/ 5800 Lms)	**QT**	**MCT** (30K/40K/50K)	**BZ** (Bronze)
	2L (48W/64W/80W, 6960/ 9280/ 11,600 Lms)			**BK** (Black)
				WH (White)
				SV (Gray)

Options (Factory Installed)

OCS	-	Occupancy Sensor
EM	-	Emergency Backup Battery

LUMEN INFORMATION

1L

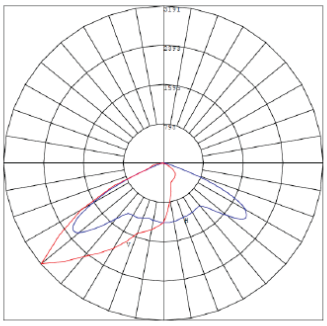

BUD Rating: B0-U0-G1

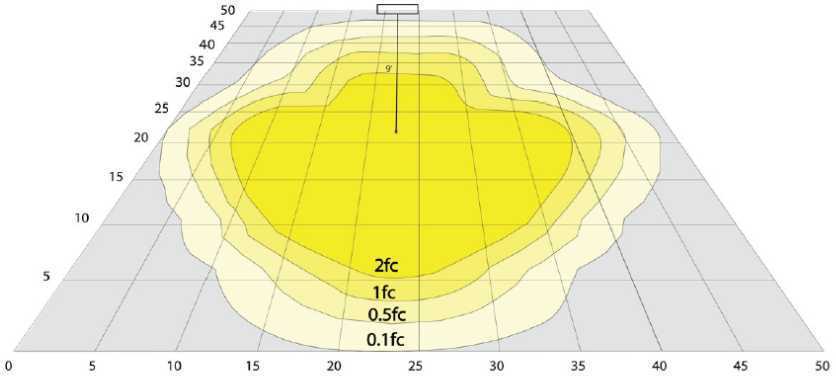

Area 45'x 50' Mounting Height: 9'

2L

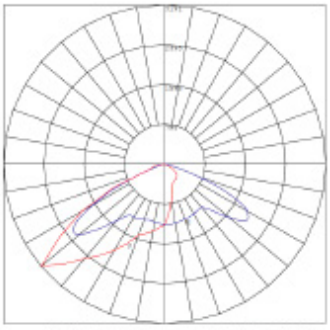

BUD Rating: B0-U0-G1

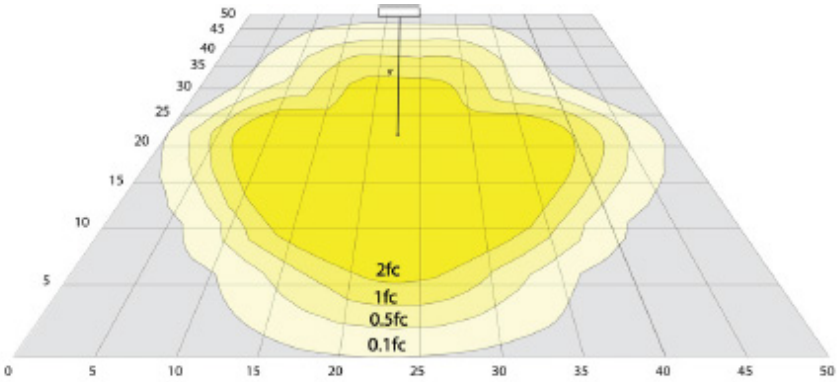

Area 45'x 50' Mounting Height: 9'